Butterfly Valve with Lug types

- Disc 304 stainless steel
- Bubble tight shut-off
- Resilient seat
- Valve face-to-face dimensions comply with API 609 & MSS-SP-67
- Completely assembled and tested, ready for installation

5-year warranty

Type overview

Type	DN
F680HD	80

Technical data

Functional data	Valve size [mm]	3" [80]
	Fluid	chilled or hot water, up to 60% glycol
	Fluid Temp Range (water)	-22...250°F [-30...120°C]
	Body Pressure Rating	ANSI Class Consistent with 125, 232 psi CWP
	Close-off pressure Δps	200 psi
	Flow characteristic	modified equal percentage
	Leakage rate	0% leakage, leakage rateA
	Pipe connection	Flange for use with ASME/ANSI class 125/150
	Servicing	maintenance-free
	Flow Pattern	2-way
	Controllable flow range	90° rotation
	Cv	302
	Maximum Velocity	12 FPS
	Lug threads	5/8-11 UNC
Materials	Valve body	Ductile cast iron ASTM A536
	Body finish	epoxy powder coating (blue RAL 5002)
	Stem	416 stainless steel
	Stem seal	EPDM (lubricated)
	Seat	EPDM
	Bearing	RPTFE
	Disc	304 stainless steel
Suitable actuators	Non Fail-Safe	GRB(X)
	Spring	2*AFB(X)
	Electrical fail-safe	GKRB(X)

Product features

Flow/Mounting details

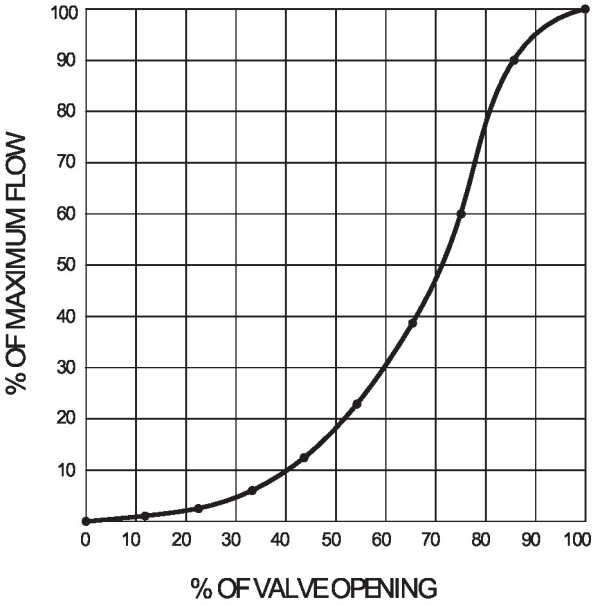

Dimensions

Type	DN	Weight
F680HD	80	16 lb [7.4 kg]

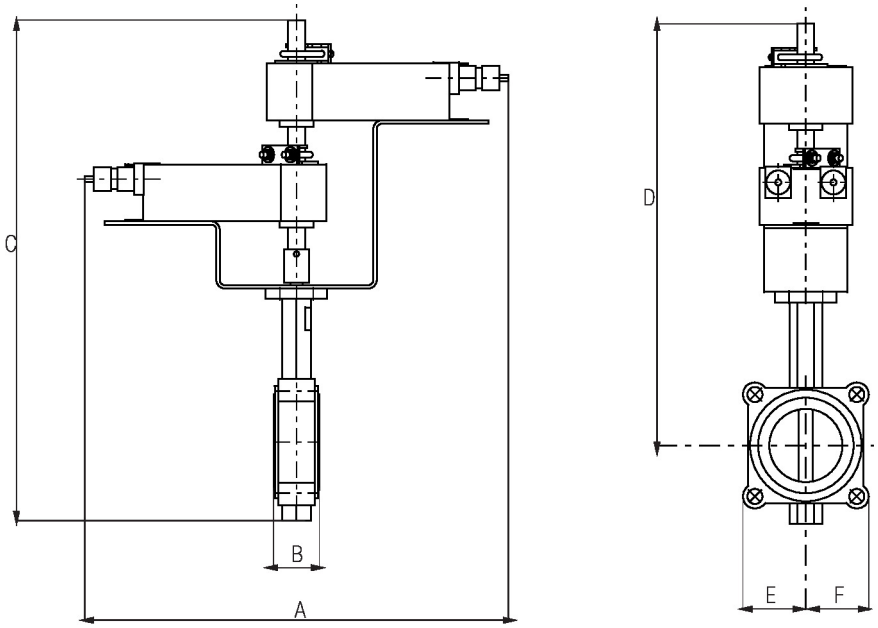

Valve with 2*AF Actuator

A	B	C	D	E	F	Number of Bolt Holes
17.6" [448]	1.9" [49]	21.4" [544]	18.0" [457]	3.5" [89]	3.5" [89]	4

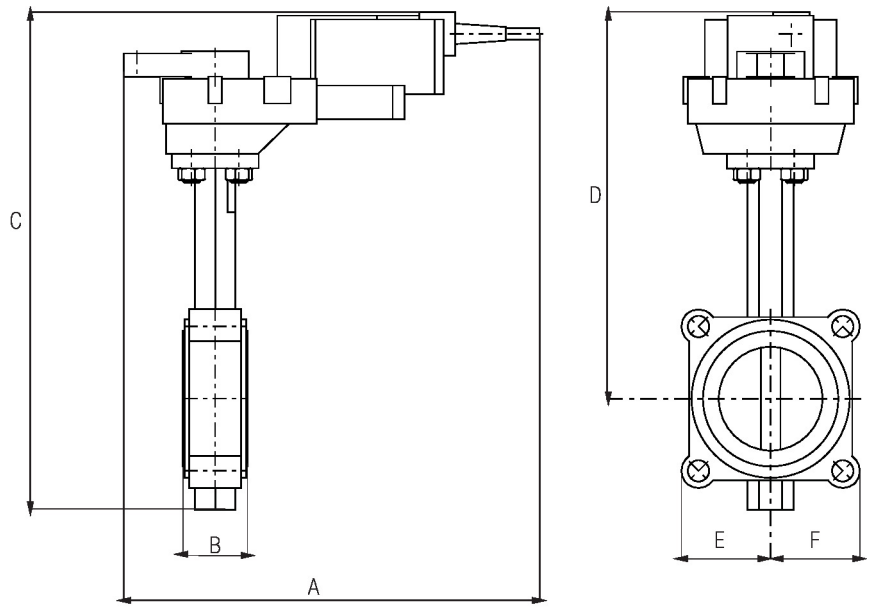

Valve with GK Actuator

A	B	C	D	E	F	Number of Bolt Holes
10.9" [277]	1.9" [49]	16.5" [419]	13.1" [334]	3.5" [89]	3.5" [89]	4

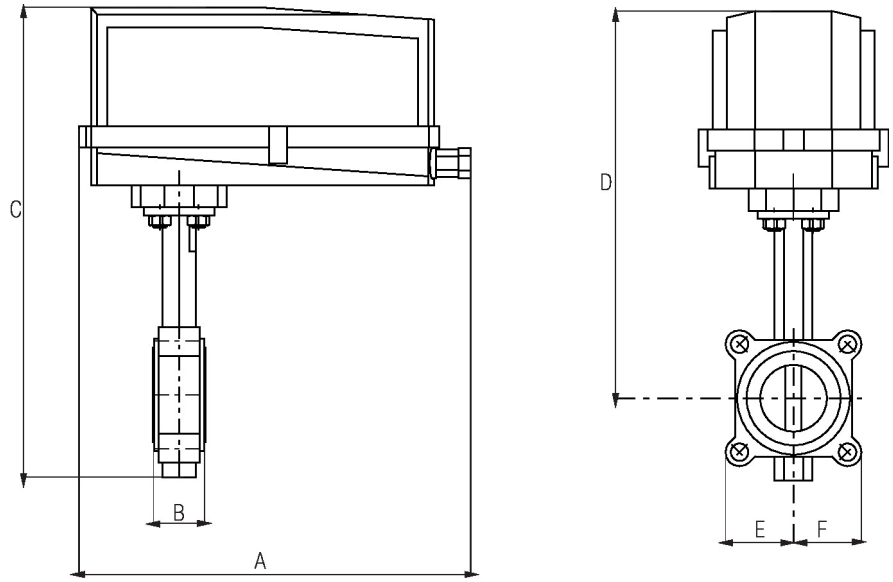

Valve with GR/GK..N4 Actuator

A	B	C	D	E	F	Number of Bolt Holes
14.1" [358]	1.9" [49]	17.8" [451]	14.3" [363]	3.7" [95]	3.7" [95]	4

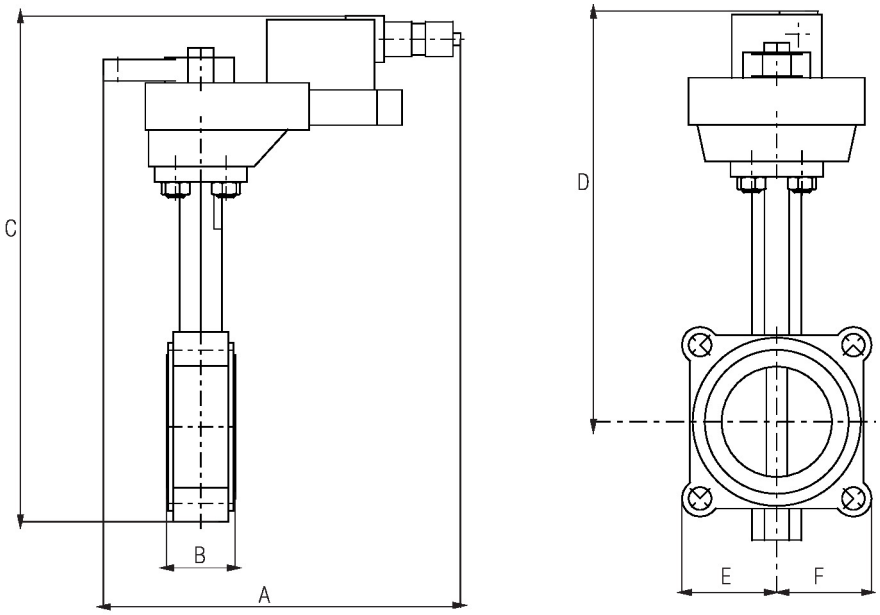

Valve with GR Actuator

A	B	C	D	E	F	Number of Bolt Holes
10.8" [275]	1.9" [49]	14.3" [362]	11.0" [279]	3.5" [89]	3.5" [89]	4

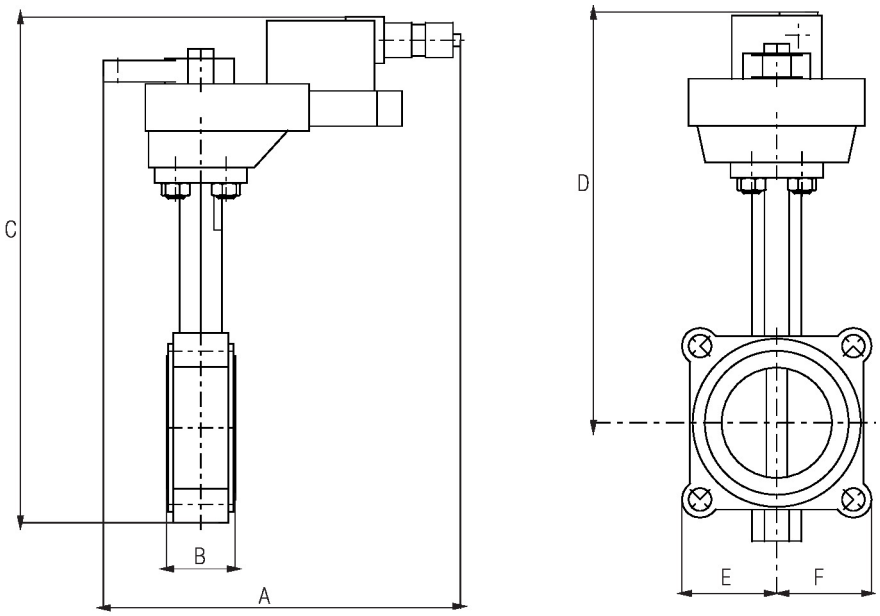

Valve with GM Actuator

A	B	C	D	E	F	Number of Bolt Holes
9.1" [231]	1.9" [49]	16.5" [419]	13.1" [334]	3.5" [89]	3.5" [89]	4

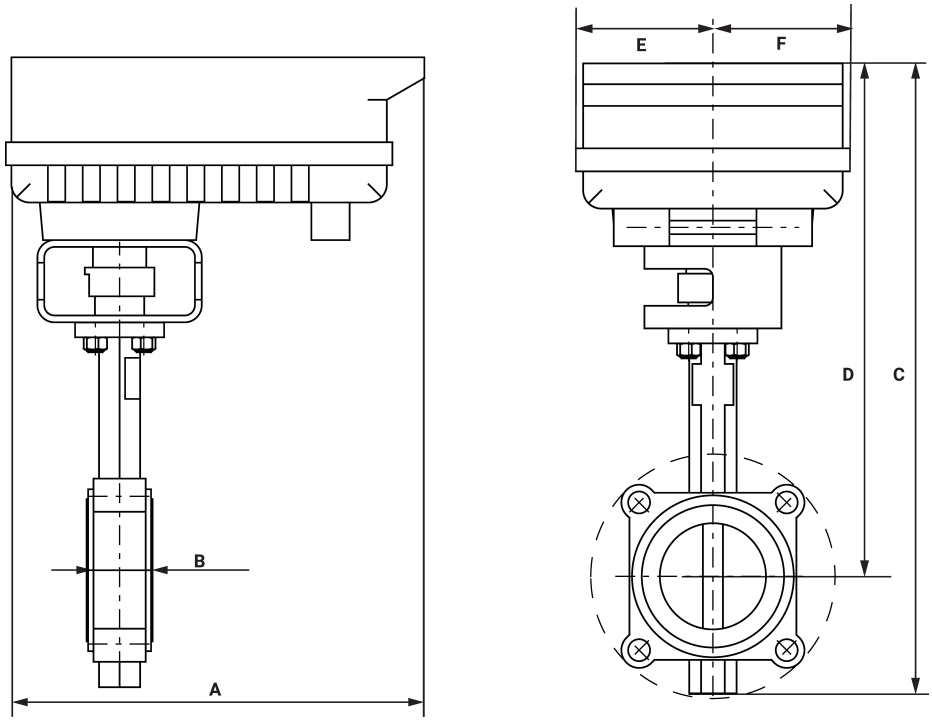

Valve with PR Actuator

A	B	C	D	E	F	Number of Bolt Holes
12.0" [304]	1.9" [49]	18.2" [463]	14.7" [374]	3.9" [100]	3.9" [100]	4

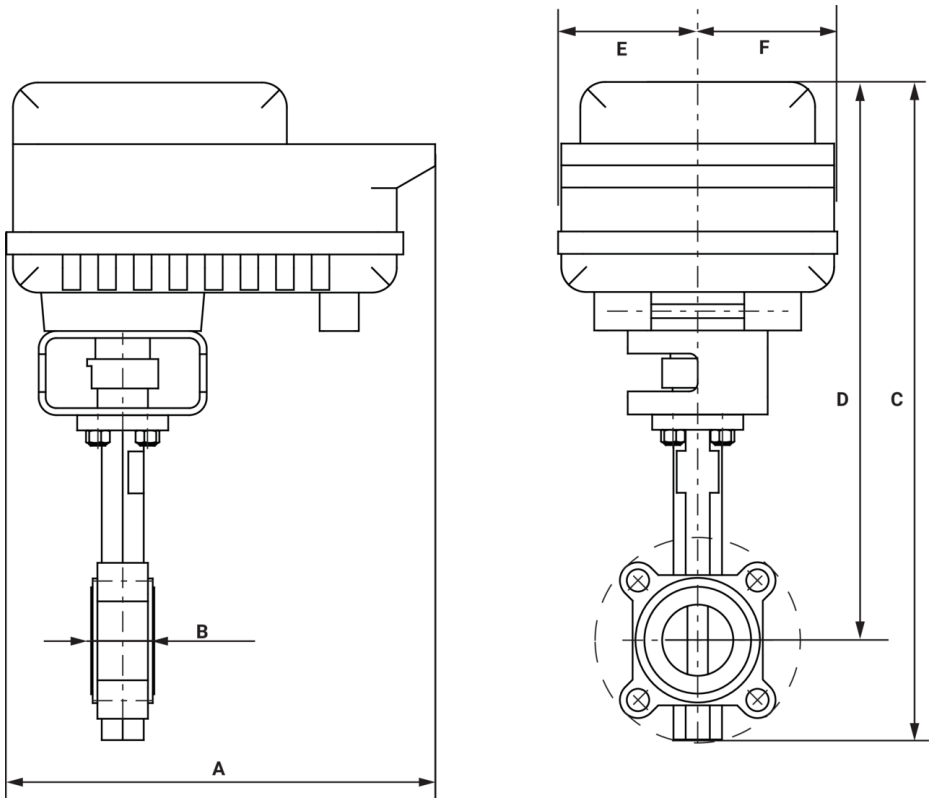

Valve with PK actuator

A	B	C	D	E	F	Number of Bolt Holes
12.0" [304]	1.9" [49]	19.8" [502]	16.5" [419]	3.9" [100]	3.9" [100]	4

Dimensions

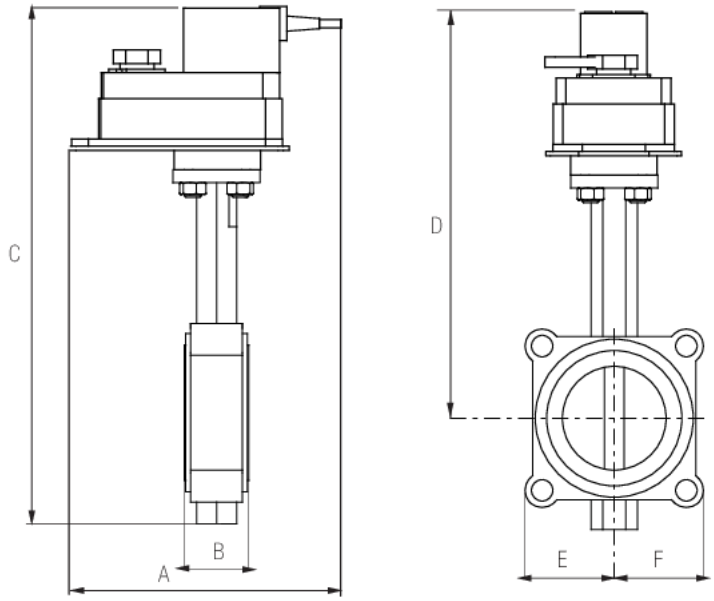

Valve with DR actuator

A	B	C	D	E	F	Number of Bolt Holes
11.3" [286]	1.9" [49]	15.6" [397]	12.4" [315]	3.5" [89]	3.5" [89]	4

BELIMO

MFT/programmable, Electrical fail-safe, 24 V

Technical data sheet DKRX24-MFT-T N4

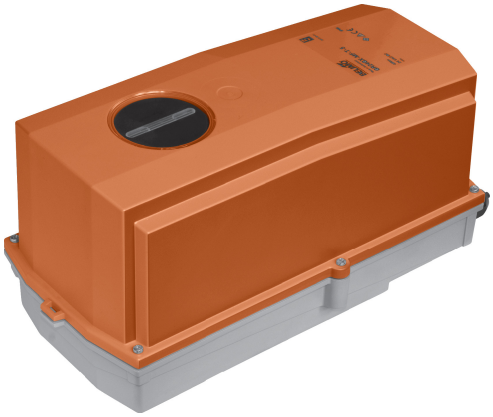

5-year warranty

Technical data

Electrical data	Nominal voltage	AC/DC 24 V
	Nominal voltage frequency	50/60 Hz
	Nominal voltage range	AC 19.2...28.8 V / DC 21.6...28.8 V
	Power consumption in operation	12 W
	Power consumption in rest position	3 W
	Transformer sizing	21 VA
	Electrical Connection	Terminal blocks
	Overload Protection	electronic thoughout 0...90° rotation
Functional data	Torque motor	90 Nm
	Operating range Y	2...10 V
	Operating range Y note	4...20 mA w/ ZG-R01 (500 Ω, 1/4 W resistor)
	Input impedance	100 kΩ (0.1 mA), 500 Ω, 1000 Ω (on/off)
	Operating range Y variable	Start point 0.5...30 V End point 2.5...32 V
	Operating modes optional	variable (VDC, PWM, on/off, floating point)
	Position feedback U	2...10 V
	Position feedback U note	Max. 0.5 mA
	Position feedback U variable	VDC variable
	Direction of motion motor	selectable with switch 0/1
	Direction of motion fail-safe	reversible with switch
	Manual override	under cover
	Running Time (Motor)	150 s / 90°
	Running time motor variable	95...150 s
	Running time fail-safe	<35 s
	Noise level, motor	45 dB(A)
	Noise level, fail-safe	60 dB(A)
	Position indication	Mechanical, 5...20 mm stroke
Safety data	Power source UL	Class 2 Supply
	Degree of protection IEC/EN	IP66/67
	Degree of protection NEMA/UL	NEMA 4X
	Enclosure	UL Enclosure Type 4X
	Quality Standard	ISO 9001
	Ambient humidity	Max. 100% RH
	Ambient temperature	-22...122°F [-30...50°C]
	Ambient temperature note	-40...50°C for actuator with integrated heating
	Storage temperature	-40...176°F [-40...80°C]
	Servicing	maintenance-free
Weight	Weight	11 lb [4.8 kg]

Materials	Housing material	Die cast aluminium and plastic casing

Accessories

	Description	Type
Gateways	Gateway MP to BACnet MS/TP	UK24BAC
	Gateway MP to Modbus RTU	UK24MOD
	Gateway MP to LonWorks	UK24LON
Electrical accessories	**Description**	**Type**
	Service tool, with ZIP-USB function, for programmable and communicative Belimo actuators, VAV controller and HVAC performance devices	ZTH US
Tools	**Description**	**Type**
	Connecting cable 10 ft [3 m], A: RJ11 6/4 ZTH EU, B: 3-pin Weidmüller and supply connection	ZK4-GEN
	Service tool, with ZIP-USB function, for programmable and communicative Belimo actuators, VAV controller and HVAC performance devices	ZTH US
Factory add-on option only	**Description**	**Type**
	Heater, with adjustable thermostat	ACT_PACK_H

Electrical installation

INSTALLATION NOTES

1 Provide overload protection and disconnect as required.

3 Actuators may also be powered by DC 24 V.

5 Only connect common to negative (-) leg of control circuits.

7 A 500 Ω resistor (ZG-R01) converts the 4...20 mA control signal to 2...10 V.

10 For triac sink the Common connection from the actuator must be connected to the Hot connection of the controller. Position feedback cannot be used with a triac sink controller; the actuator internal common reference is not compatible.

12 IN4004 or IN4007 diode. (IN4007 supplied, Belimo part number 40155).

16 Actuators are provided with a numbered screw terminal strip instead of a cable.

Meets cULus requirements without the need of an electrical ground connection.

Warning! Live electrical components!
During installation, testing, servicing and troubleshooting of this product, it may be necessary to work with live electrical components. Have a qualified licensed electrician or other individual who has been properly trained in handling live electrical components perform these tasks. Failure to follow all electrical safety precautions when exposed to live electrical components could result in death or serious injury.

Wiring diagrams

On/Off

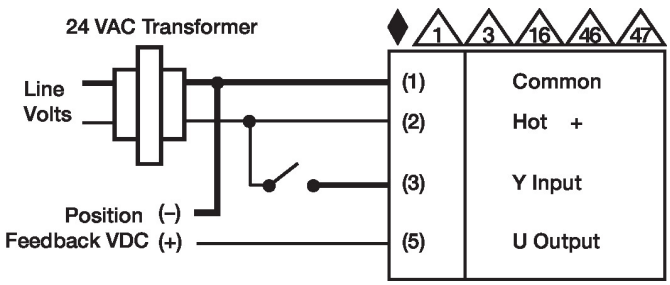

Floating Point

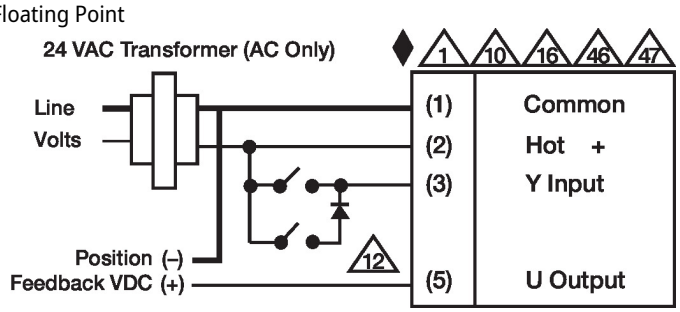
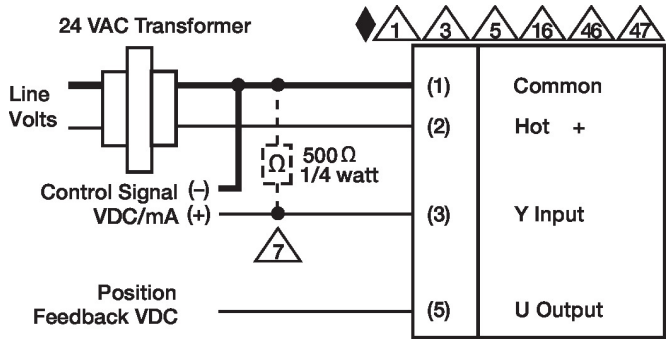
VDC/mA Control